Product Sheet

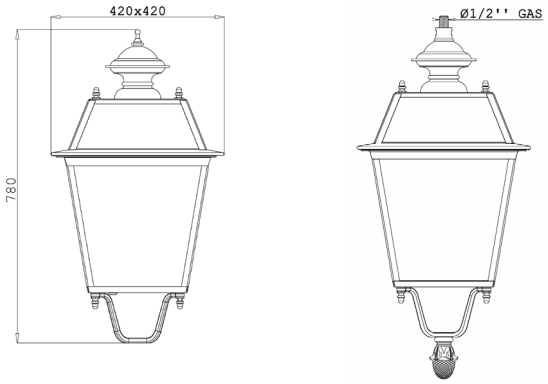

LF/LS 13 LED iBox SMART

MAIN CHARACTERISTICS	
Applications	Street and urban lighting
Optic	STU-M/S: Asymmetrical optic for street lighting (urban). STW: Asymmetrical optic for wide roads and wet asphalts lighting. STE-M/S: Asymmetrical optic for street lighting (suburban). SV: Asymmetrical optic for narrow urban streets or highway entrance/exit turns. S05: Asymmetrical optic for urban and street lighting. S: Roto-symmetrical optic for parking and urban areas. TS: Asymmetrical optic for parking and urban areas. Colour temperature: 4000K (optional 3000K) | CRI ≥ 70 (optional CRI 80) Photobiological safety class: EXEMPT GROUP LED source efficiency: 168 lm/W @ 525mA, Tj=85°C – 4000K
Insulation class	II (I optional)
Protection degree	Optical unit: IP66 Gear tray compartment: IP44 IK08
Tilt angle	0°
Montaggio	LF: Installation on pole ½" GAS LS: Installation on brackets ½" GAS
Gear tray	Removable
Moduli LED	Removable
Dimensions & weight	420x420x780mm (*See the drawing*) - 10Kg
Exposed surface	Side: 0.10m^2 – Top: 0.18m^2
Operating temp.	-40°C / +35°C
Storage temperature	-40°C / +80°C
Main reference	EN 60598-1, EN 60598-2-3, EN 62471, EN 55015, EN 61547, EN 61000-3-2, EN 61000-3-3
CE EXEMPT GROUP	
ELECTRICAL CHARACTERISTICS	
Rated voltage	220÷240V 50/60Hz
LED current	525mA, 700mA
Power factor	>0,9 (at full load)
Mains Connection	For cables max section 2,5mm^2
Surge protection	SPD integrated 10kV-10kA, type II, with LED signal and thermo fuse to disconnect load at the end of life. Pulse withstand: 10kV / 10kV CM/DM
Control system (optional)	F: Fixed power not dimmable. DA: Automatic dimming (virtual midnight) with default profile. DAC: Custom DA profile. FLC: Constant light flux. D10: Dimming interface with 1-10 V signal DALI: Digital dimming interface DALI. PLM: Power Line single point communication system. WL: Wireless single point communication system.
Optical unit lifetime (Ta=25°C)	>100.000hr L90B10 >100.000hr L90, TM-21
MATERIALS	
Fixing	LF13: Die-cast aluminum. LS13: Stainless steel tube.
Body	Steel
Heatsink	Die-cast aluminum UNI EN1706 powder painted.
Optic	99.85% aluminum with a surface finish in 99.95% with vacuum-sealed deposition. Aluminum grade class A+ (DIN EN 16268)
Screen	Flat tempered glass, 4mm thickness PCG.
Colour	Graphite. Cod. 01

DA Profile

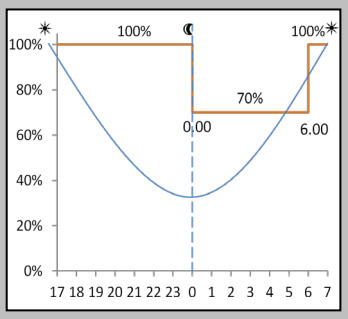

PLM

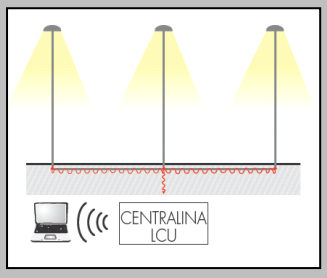

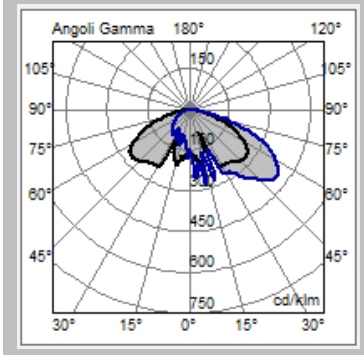

S05 Optic

All the published photometrical data has been obtained according to EN 13032-1

GREENLIGHT

LUMINAIRE	OPTIC	LED CURRENT (mA)	RATED LUMINAIRE FLUX* (Tq=25°C, 4000K, lm)	RATED LUMINAIRE POWER* (Tq=25°C, Vin=230Vac, F/DA/DAC, W)	LUMINAIRE EFFICACY (Tq=25°C, lm/W)	RATED LED FLUX* (Tj=85°C, 4000K, lm)	RATED LED POWER* (Tj=85°C, W)
LF-LS 13-14 iBox SMART 0F2H1 4.5-1M PCG	S05 STU-M STU-S SV TS	525	1430	16	89	2184	13
LF-LS 13-14 iBox SMART 0F2H1 4.5-2M PCG			2800	30.5	91	4368	26
LF-LS 13-14 iBox SMART 0F2H1 4.5-3M PCG			4200	44	95	6552	39
LF-LS 13-14 iBox SMART 0F2H1 4.5-4M PCG			5430	57	95	8736	52
LF-LS 13-14 iBox SMART 0F2H1 4.7-1M PCG	S05 STU-M STU-S SV TS	700	1840	21.5	85	2765	18
LF-LS 13-14 iBox SMART 0F2H1 4.7-2M PCG			3590	40	89	5530	36
LF-LS 13-14 iBox SMART 0F2H1 4.7-3M PCG			5340	58	92	8295	54
LF-LS 13-14 iBox SMART 0F2H1 4.7-4M PCG			6830	76	89	11060	72
LF-LS 13-14 iBox SMART 0F3 4.5-1M PCG	STE-M STE-S STW	525	1990	21.5	92	2950	17
LF-LS 13-14 iBox SMART 0F3 4.5-2M PCG			3920	39	100	5900	34
LF-LS 13-14 iBox SMART 0F3 4.5-3M PCG			5690	57	99	8850	51
LF-LS 13-14 iBox SMART 0F3 4.5-4M PCG			7550	76	99	11800	68

LUMINAIRE	OPTIC	LED CURRENT (mA)	RATED LUMINAIRE FLUX* (Tq=25°C, 4000K, lm)	RATED LUMINAIRE POWER* (Tq=25°C, Vin=230Vac, F/DA/DAC, W)	LUMINAIRE EFFICACY (Tq=25°C, lm/W)	RATED LED FLUX* (Tj=85°C, 4000K, lm)	RATED LED POWER* (Tj=85°C, W)
LF-LS 13-14 iBox SMART 0F3 4.7-1M PCG	STE-M STE-S STW	700	2490	28	88	3735	24
LF-LS 13-14 iBox SMART 0F3 4.7-2M PCG			4900	52	94	7470	48
LF-LS 13-14 iBox SMART 0F3 4.7-3M PCG			7160	76	94	11205	72
LF-LS 13-14 iBox SMART 0F2H1 4.5-2M PCG	S	525	2800	30.5	91	4368	26
LF-LS 13-14 iBox SMART 0F2H1 4.5-4M PCG			5430	57	95	8736	52
LF-LS 13-14 iBox SMART 0F2H1 4.7-2M PCG	S	700	3590	40	89	5530	36
LF-LS 13-14 iBox SMART 0F2H1 4.7-4M PCG			6830	76	89	11060	72

**RATED LUMINAIRE FLUX / RATED LUMINAIRE POWER: Rated data obtained in laboratory.*
**RATED LED FLUX / RATED LED POWER: Rated data extrapolated from LED manufacturer datasheet.*

The characteristics of the product listed above are subjected to change without notice.
Values indicated in this technical sheet are to be considered rated values subject to a tolerance of +/-5%.

LUMINAIRE	OPTIC	LED CURRENT (mA)	RATED LUMINAIRE FLUX* (Tq=25°C, 3000K, lm)	RATED LUMINAIRE POWER* (Tq=25°C, Vin=230Vac, F/DA/DAC, W)	LUMINAIRE EFFICACY (Tq=25°C, lm/W)	RATED LED FLUX* (Tj=85°C, 3000K, lm)	RATED LED POWER* (Tj=85°C, W)
LF-LS 13-14 iBox SMART 0F2H1 3.5-1M PCG	S05 STU-M STU-S SV TS	525	1330	16	83	2031	13
LF-LS 13-14 iBox SMART 0F2H1 3.5-2M PCG			2600	30.5	85	4062	26
LF-LS 13-14 iBox SMART 0F2H1 3.5-3M PCG			3910	44	89	6093	39
LF-LS 13-14 iBox SMART 0F2H1 3.5-4M PCG			5050	57	89	8124	52
LF-LS 13-14 iBox SMART 0F2H1 3.7-1M PCG	S05 STU-M STU-S SV TS	700	1710	21.5	80	2571	18
LF-LS 13-14 iBox SMART 0F2H1 3.7-2M PCG			3340	40	84	5143	36
LF-LS 13-14 iBox SMART 0F2H1 3.7-3M PCG			4970	58	86	7714	54
LF-LS 13-14 iBox SMART 0F2H1 3.7-4M PCG			6350	76	84	10286	72
LF-LS 13-14 iBox SMART 0F3 3.5-1M PCG	STE-M STE-S STW	525	1850	21.5	86	2744	17
LF-LS 13-14 iBox SMART 0F3 3.5-2M PCG			3650	39	94	5487	34
LF-LS 13-14 iBox SMART 0F3 3.5-3M PCG			5290	57	93	8231	51
LF-LS 13-14 iBox SMART 0F3 3.5-4M PCG			7020	76	92	10974	68

LUMINAIRE	OPTIC	LED CURRENT (mA)	RATED LUMINAIRE FLUX* (Tq=25°C, 3000K, lm)	RATED LUMINAIRE POWER* (Tq=25°C, Vin=230Vac, F/DA/DAC, W)	LUMINAIRE EFFICACY (Tq=25°C, lm/W)	RATED LED FLUX* (Tj=85°C, 3000K, lm)	RATED LED POWER* (Tj=85°C, W)
LF-LS 13-14 iBox SMART 0F3 3.7-1M PCG	STE-M STE-S STW	700	2320	28	83	3474	24
LF-LS 13-14 iBox SMART 0F3 3.7-2M PCG			4560	52	88	6947	48
LF-LS 13-14 iBox SMART 0F3 3.7-3M PCG			6660	76	88	10421	72
LF-LS 13-14 iBox SMART 0F2H1 3.5-2M PCG	S	525	2600	30.5	85	4062	26
LF-LS 13-14 iBox SMART 0F2H1 3.5-4M PCG			5050	57	89	8124	52
LF-LS 13-14 iBox SMART 0F2H1 3.7-2M PCG	S	700	3340	40	84	5143	36
LF-LS 13-14 iBox SMART 0F2H1 3.7-4M PCG			6350	76	84	10286	72

**RATED LUMINAIRE FLUX / RATED LUMINAIRE POWER: Rated data obtained in laboratory.*
**RATED LED FLUX / RATED LED POWER: Rated data extrapolated from LED manufacturer datasheet.*

The characteristics of the product listed above are subjected to change without notice.
Values indicated in this technical sheet are to be considered rated values subject to a tolerance of +/-5%.