Product Sheet

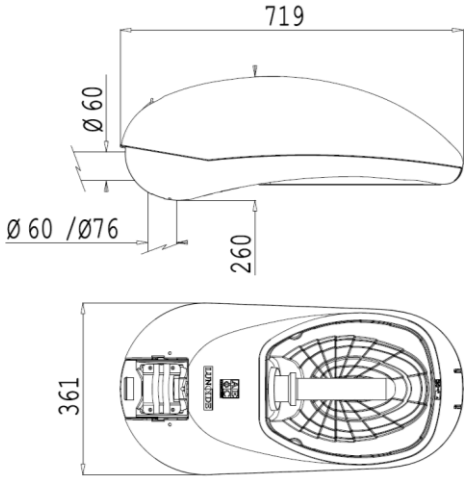

LUNOIDE HID	
MAIN CHARACTERISTICS	
Applications	Street and urban lighting
Optical unit	ST: Asymmetrical optic for street lighting. Photometrical classification : Cut-off
Insulation class	II (I optional)
Protection degree	IP44 gear tray compartment IP66 optic compartment
Tilt angle	Bracket: da 0° a -45° Post-top: da -10° a +45°
Mounting	Post-top Ø60, Ø76mm Bracket Ø60mm
Gear tray	Removable
Dimensions and weight	719x361x260mm 10.5÷14 kg
Side surface	0.13 m^2
Top surface	0.23 m^2
Main reference standards	EN 60598-1, EN 60598-2-3, EN 62471, EN 55015, EN 61547, EN 61000-3-2, EN 61000-3-3
IP66	
ELECTRICAL CHARACTERISTICS	
Rated voltage	230V 50Hz Electromagnetic ballast EEI=A3
Power factor	>0,9
Ignitor	Superimposerd pulse With timer (on request)
Control system	F: Fixed output. DA:Automatic dimming with default profile. DAC: Custom DA profile. PLM: Single point communication module.
On-load switch	Automatic, included for class II
Connection	For cables max section 4mm^2
MATERIALS	
Fixing	Die-cast aluminium UNI EN 1706
Lower frame	Die-cast aluminium UNI EN 1706
Upper canopy	VP1: Tecnopolymer F.V. VP2: Die-cast aluminium UNI EN 1706
Closure	Tecnopolymer closing hook with stainless steel spring.
Optic	99.85% Aluminium, anodized and polished
Lamp holder	Ceramic
Screen	Flat tempered glass 4mm
Cable entry	Fair-lead membrane.
Gasket	EPDM
Colour	Lower frame: RAL7038 Upper canopy: RAL7035

The characteristics of the product listed above are subjected to change.
They will be confirmed in case of order

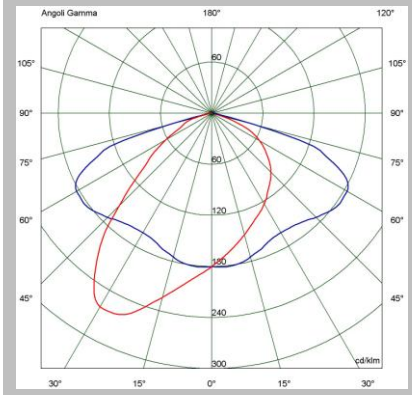

ST Optic

All photometric data have been detected in compliance to the standards UNI EN 13032-1 and IES LM 79-08